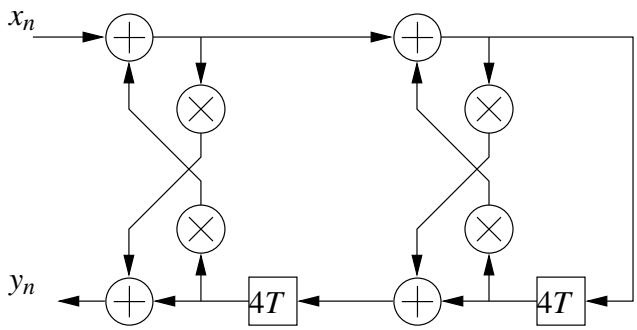A3.1) For the given filter, the latency of a multiplication is two time units and that of an addition is one time units. Apply pipelining and/or retiming so that the critical path is at most two time units. Also calculate the iteration bound (T_∞) for the original filter and the pipelined filter.