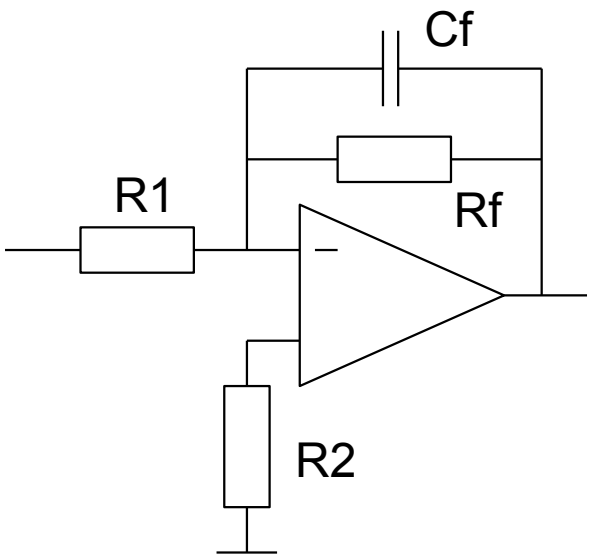
Cf
R1
Rf
R2